YASKAWA

VMI-200, VMI-400

Two station turntable.

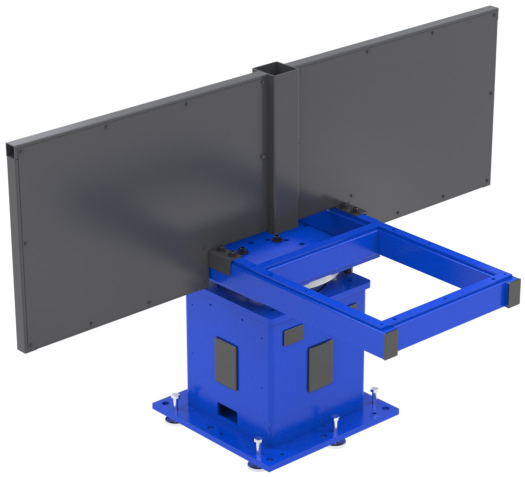

- Simple, modular design.
- Servo powered.
- Suitable working height.

This is a two station servo powered turntable, with anti-glare shield included, for workpieces in a fixed position during welding. It has been designed for operator ease of use, with a suitable working height for loading and unloading the fixtures.

Maximum payload up to 500 kg on each side.

Technical data		VMI-200 SD	VMI-400 SD
Max. payload per station		**200 kg**	**400 kg**
Index axis torque	dynamic static	1330 Nm 1064 Nm	2070 Nm 1656 Nm
Index axis	rated speed maximum speed	0-10.6 rpm 30 rpm	0-10.6 rpm 28.4 rpm
Weight		293 kg	323 kg
Part No.		133387-101	148155-100

Controlled by YRC1000

Controlled by DX200

VMI-200, -400

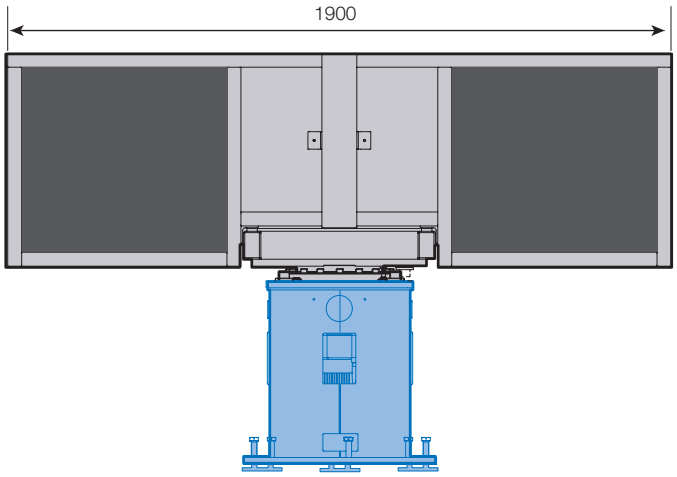

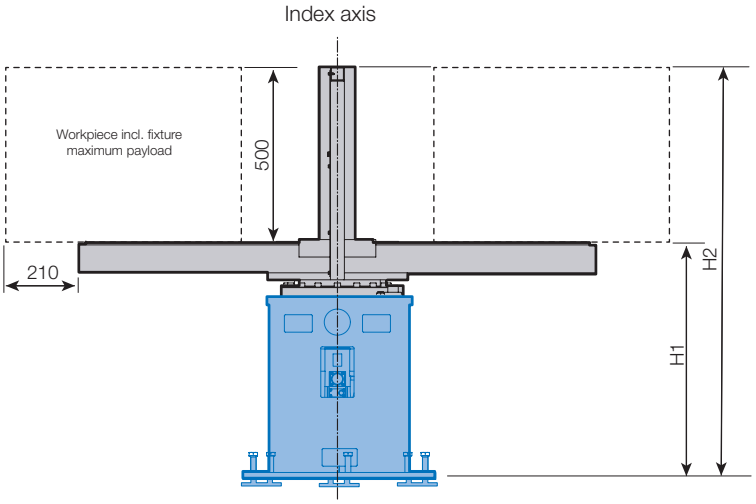

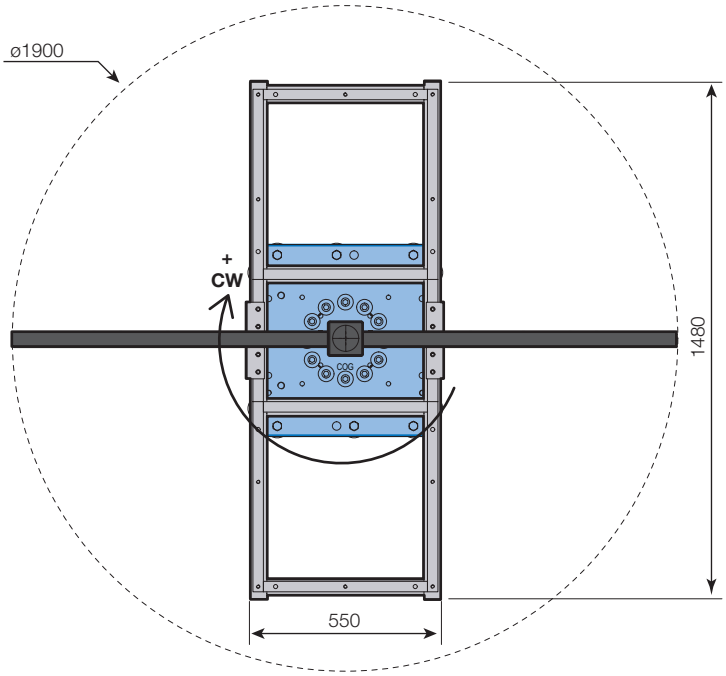

	H1 (mm)	H2 (mm)	Part No.
VMI-200 SD	1132	630	133387-101
VMI-400 SD	1177	675	148155-100

YASKAWA

YASKAWA Nordic AB
PO Box 504
SE-385 25 Torsås, SWEDEN

Phone +46 480 41 78 00
info.se@yaskawa.eu.com
www.yaskawa.eu.com

© YASKAWA Nordic AB · RegNo. 1054EN-05, Januari 2021
Technical data may be subject to change without previous notice.