YASKAWA

V2-500

Two station positioner with vertical indexing.



Two station positioner for workpieces requiring rotation about one axis. It has been designed for operator ease of use, with a suitable working height for loading and unloading the fixtures, and is delivered complete with an anti-glare shield.

The head- and tailstock modules are equipped with MotoMount fixture mounting system.

Technical data		V2-500 D3
Max. capacity	load per station	**500 kg**
Max fixture width	diameter	ø1300, ø1600 mm
Distance between fixture pin-pin		1650, 2050, 2550 mm
Index axis		
	Motor power	3.7 kW
	Torque dynamic	2251 Nm
	Torque static	1800 Nm
Rotating axis		
	Motor power	1.3 kW
	Torque dynamic	1177 Mm
	Torque static	941 Nm
	Offset	191 mm

Fixture holder MotoMount

Controlled by YRC1000

Controlled by DX200

V2-500

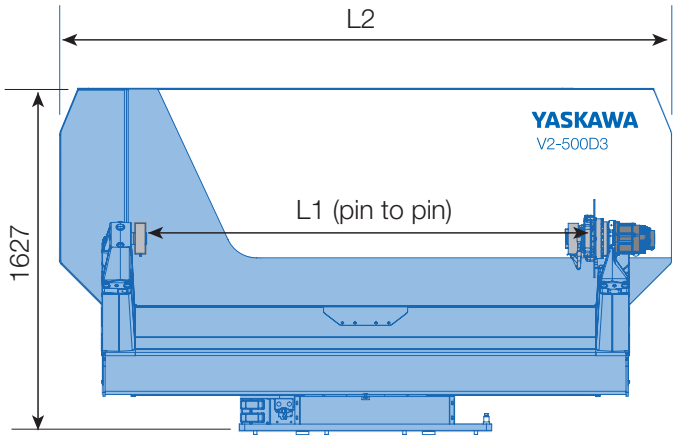

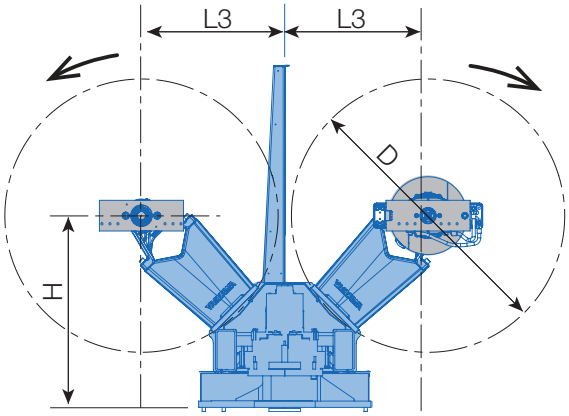

Type	Part No.	L1	L2	L3	H	Weight
ø1300 mm	**148549-100**	1650 mm	2510 mm	682 mm	912 mm	1343 kg
	148549-101	2050 mm	2910 mm			1384 kg
	148549-102	2550 mm	3410 mm			1454 kg
ø1600 mm	**148548-100**	1650 mm	2510 mm	823 mm	1053 mm	1409 kg
	148548-101	2050 mm	2910 mm			1450 kg
	148548-102	2550 mm	3410 mm			1520 kg

Options		Part No.
2x 3/8” air		137778-200
2x 3/8” air + Signal kit 4 channel I/O Fieldbus+PE		137779-201
2x 3/8” air + Signal kit 4 channel I/O ProfiNet+PE		137779-202
2x 3/8” air + Signal kit 12 channel I/O+PE		137779-203
2x 3/8” air + Signal kit 24 channel I/O+PE		137779-204
2x 3/8” Controlled air		137779-400
2x 3/8” Controlled-air+ Signal kit 4 channel I/O Fieldbus+PE		137779-401
2x 3/8” Controlled-air+ Signal kit 4 channel I/O ProfiNet+PE		137779-402
2x 3/8” Controlled-air+ Signal kit 12 channel I/O+PE		137779-403
2x 3/8” Controlled-air+ Signal kit 24 channel I/O+PE		137779-404
Retrofit adapter for fixtures (Length = L -130)	Headstock Tailstock	2x 143073-100 2x 143074-100
Enhanced welding capacity		140375-101

YASKAWA

© YASKAWA Nordic AB · RegNo. 1074EN-01, Sept 2020
Technical data may be subject to change without previous notice.

YASKAWA Nordic AB
PO Box 504
SE-385 25 Torsås, SWEDEN

Phone +46 480 41 78 00
info.se@yaskawa.eu.com
www.yaskawa.eu.com