YASKAWA

H2-500

Two-station positioner in space saving ferris wheel design.



- Space saving design.
- Patented MotoMount fixture holders.
- Easy to install and operate.
- Short delivery times.

Two-station positioner for workpieces requiring rotation about one axis. Designed for best possible shape stability whilst welding, it also features an option of enhanced welding capacity.

With an ideal working height for loading/unloading the fixtures and complete with an anti-glare shield the H2 positioner is easy to install and operate.

A large number of standardized options and distances between fixture holders also makes it easy to customize this positioner according to your needs.

Technical data		H2-500 D3
Max. payload per station		**500 kg**
Distance between fixture holes		1650, 2050, 3050, 4050 mm
Welding capacity	100% duty cycle 60% duty cycle	2x 350 A 2x 460 A
Enhanced welding capacity, option	100% duty cycle 60% duty cycle	2x 700 A 2x 920 A
Torque rotating axis	dynamic static	1177 Nm 941 Nm
Rated speed rotating axis		9.0 rpm
Rated offset from centre of gravity (COG)		191 mm
Motor power	index rotating	3.7 kW 1.3 kW
Weight		1400 kg

Fixture holder MotoMount

Controlled by YRC1000

Controlled by DX200

H2-500

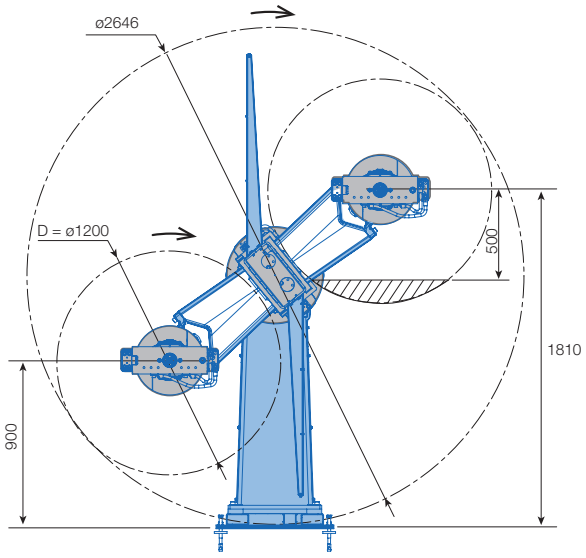

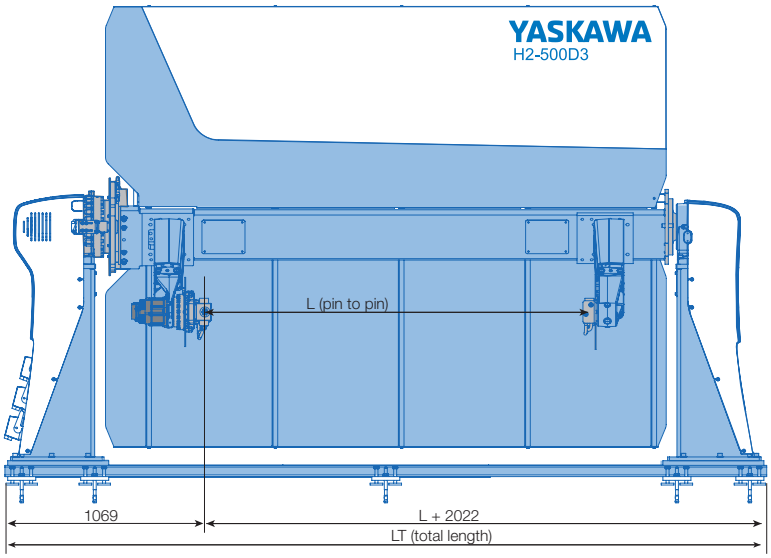

L (mm)	LT (mm)	D (mm)	Weight	Part No.
1650	3672	ø 1200	1477 kg	**147442-100**
2050	4072	ø 1200	1520 kg	**147442-101**
3050	5072	ø 1200	1628 kg	**147442-102**
4050	6072	ø 1200	1736 kg	**147442-103**

Options		Part No.
2x 3/8” air		137778-200
2x 3/8” air + Signal kit 4 channel I/O Fieldbus+PE		137778-201
2x 3/8” air + Signal kit 4 channel I/O ProfiNet+PE		137778-202
2x 3/8” air + Signal kit 12 channel I/O+PE		137778-203
2x 3/8” air + Signal kit 24 channel I/O+PE		137778-204
2x 3/8” Controlled air		137778-400
2x 3/8” Controlled-air+ Signal kit 4 channel I/O Fieldbus+PE		137778-401
2x 3/8” Controlled-air+ Signal kit 4 channel I/O ProfiNet+PE		137778-402
2x 3/8” Controlled-air+ Signal kit 12 channel I/O+PE		137778-403
2x 3/8” Controlled-air+ Signal kit 24 channel I/O+PE		137778-404
Retrofit adapter for fixtures (Length = L -130)	Headstock Tailstock	2x 143073-100 2x 143074-100
Enhanced welding capacity		140375-100
Tailstock locking kit		147768-100

YASKAWA

© YASKAWA Nordic AB · RegNo. 1073EN-07, Sept 2020
Technical data may be subject to change without previous notice.

YASKAWA Nordic AB
PO Box 504
SE-385 25 Torsås, SWEDEN

Phone +46 480 41 78 00
info.se@yaskawa.eu.com
www.yaskawa.eu.com