YASKAWA

TSL-2000, TSL-4000

Floor mounted track.

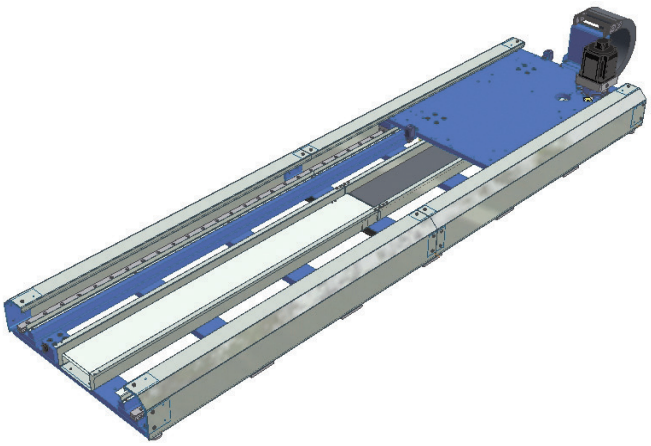

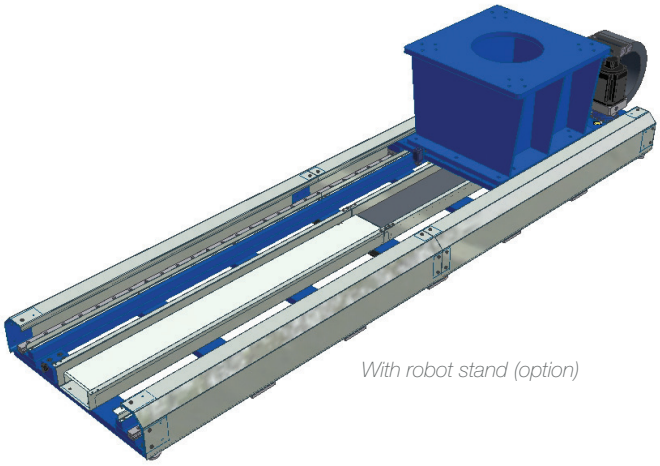

With robot stand (option)

Key benefits

- Outstanding speed.
- Quiet operation.
- For high payload robots.

This is a servo powered floor mounted track with one or two robot carriages. It can be used to transport a robot from one station to another, or to increase the robot's working range. The TSL track is prepared for zeroing function.

Since the track is built in two- or four meter modules, it is easy to extend to a suitable length.

Options

- Automatic lubrication of rack and guide blocks.
- Integrated robot stand, total height (H) 1334 mm.
- Robot stands 250, 400 and 600 mm.
- Automatic lubrication (rack and guide blocks).
- Mechanical zeroing function.

New generation Sigma-7

Controlled by YRC1000

TSL-2000S, TSL-4000

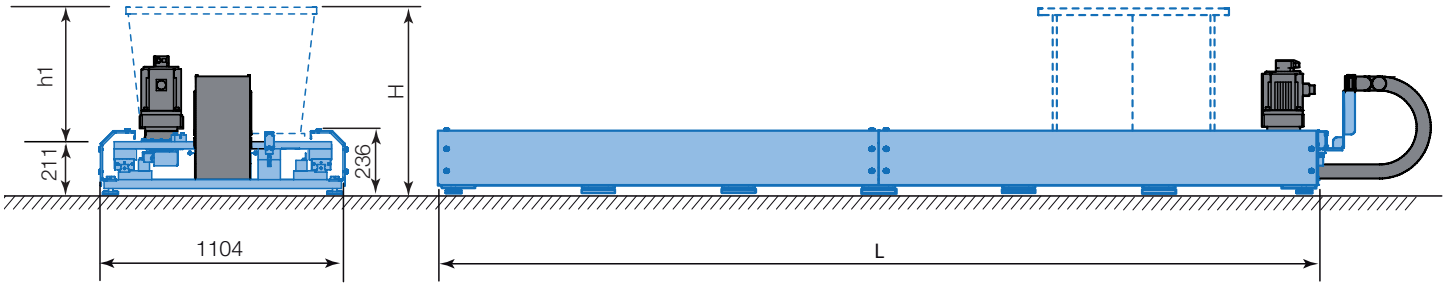

Optional robot stand	
h1 (mm)	**H (mm)**
250	461
400	611
600	811

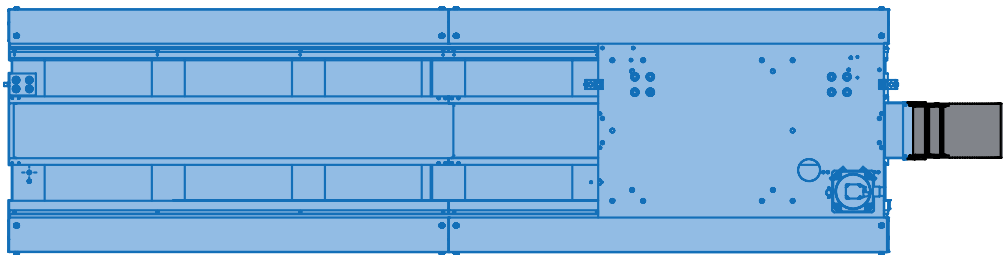

All dimensions are for reference only.

Request detailed drawings for design/engineering requirements!

Technical data	TSL-2000 SY	TSL-4000 SY
Maximum payload	**2000 kg**	**4000 kg**
Maximum speed	1.8 m/s	1.6 m/s
ED	50%	50%
Acceleration velocity	2.25 m/s^2	2.0 m/s^2
Travel 1200 mm	1.45 sec	1.55 sec
Repetitive position accuracy	±0.08 mm	±0.08 mm
Height	236 mm	236 mm
Height (H) including robot stand	461, 611, 811, 1334 mm	461, 611, 811, 1334 mm
Standard length (L)	2, 3, 4 up to 24m (in 2m/steps)	2, 3, 4 up to 24m (in 2m/steps)
Travel length, stroke (TL)	L -1340 mm	L -1340 mm

YASKAWA

YASKAWA Nordic AB
PO Box 504
SE-385 25 Torsås, SWEDEN

Phone +46 480 41 78 00
info.se@yaskawa.eu.com
www.yaskawa.eu.com

© YASKAWA Nordic AB · RegNo. 1078EN-00, April 2020
Technical data may be subject to change without previous notice.